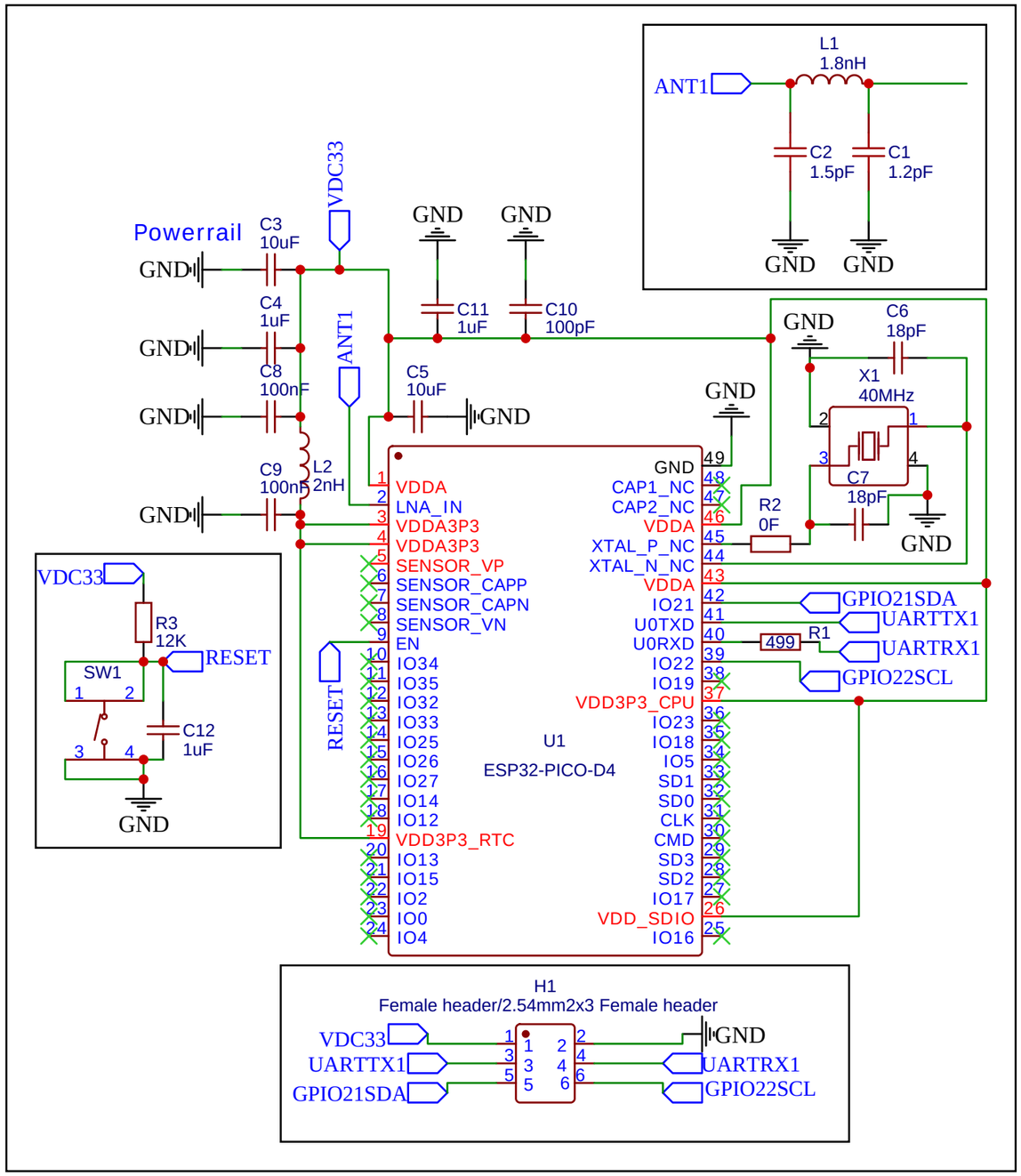

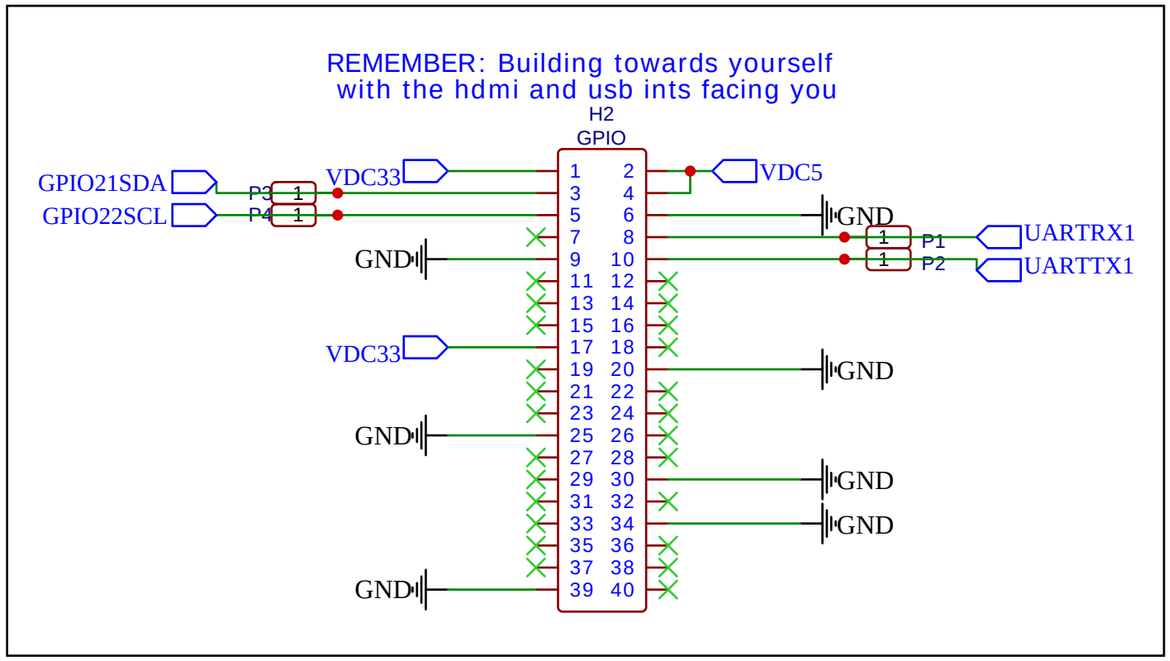

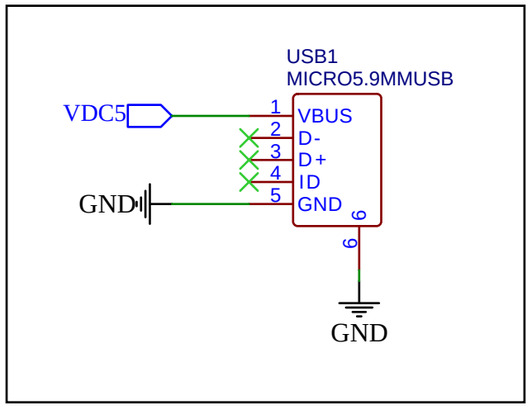

TITLE: DeAuthZeroHat-prototype		REV: 1.0
EasyEDA	Company: NunYah	Sheet: 1/1
	Date: 2020-09-25 Drawn By: YeahRight	